HUAWEI	CTIL Project: VF OEM	Option:
	Cell Name: LOPEN HEAD NURSERY	–

vodafone
CTIL - BEACON

CTIL	VF	TEF	Site Address
126549	5841	019877	LOPEN WATERGATE ON A303 TA13 5JH

Drawing Name	Drawing No	Date	Date	Date	Date			
		30.01.15	11.02.15	30.04.15	13.05.15			
		1st Issue	Revision	Revision	Revision			
		GA	GA	GA	GA			
Site Location Maps	100	A	A	A	B			
Existing Site Plan	200	A	A	B	C			
Proposed Site Plan	201	–	–	–	A			
Existing South West Site Elevation	300	A	A	B	C			
Proposed South West Site Elevation	301	A	B	C	D			
Antenna & Equipment Layout	400	A	B	C	D			
Antenna Schedule	500	A	A	B	C			
RF Systems Schematic	501	A	A	A	A			
Equipment Schedule	502	A	B	B	C			

Company	Name							
Huawei	Teamspace	✓	✓	✓	✓			

SITE LOCATION

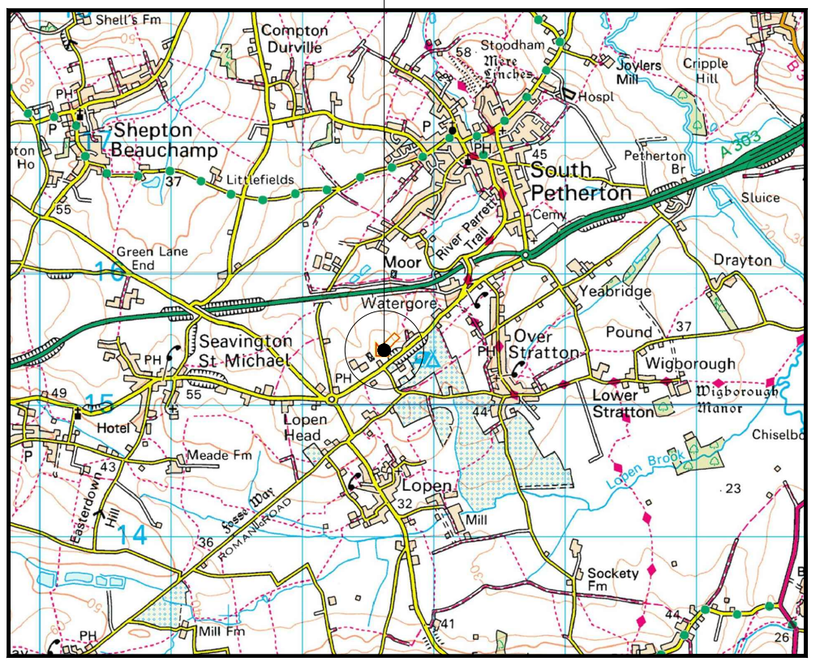

0 1km 2km
Scale

SITE LOCATION
(Scale 1:50000)

Ordnance Survey map extract
based upon Landranger map series
with the permission of the controller of
Her Majesty's Stationery Office
Licence No. 0100023487
Crown copyright.

SITE PHOTOGRAPH

= Site Access

= Access Route

SITE LOCATION

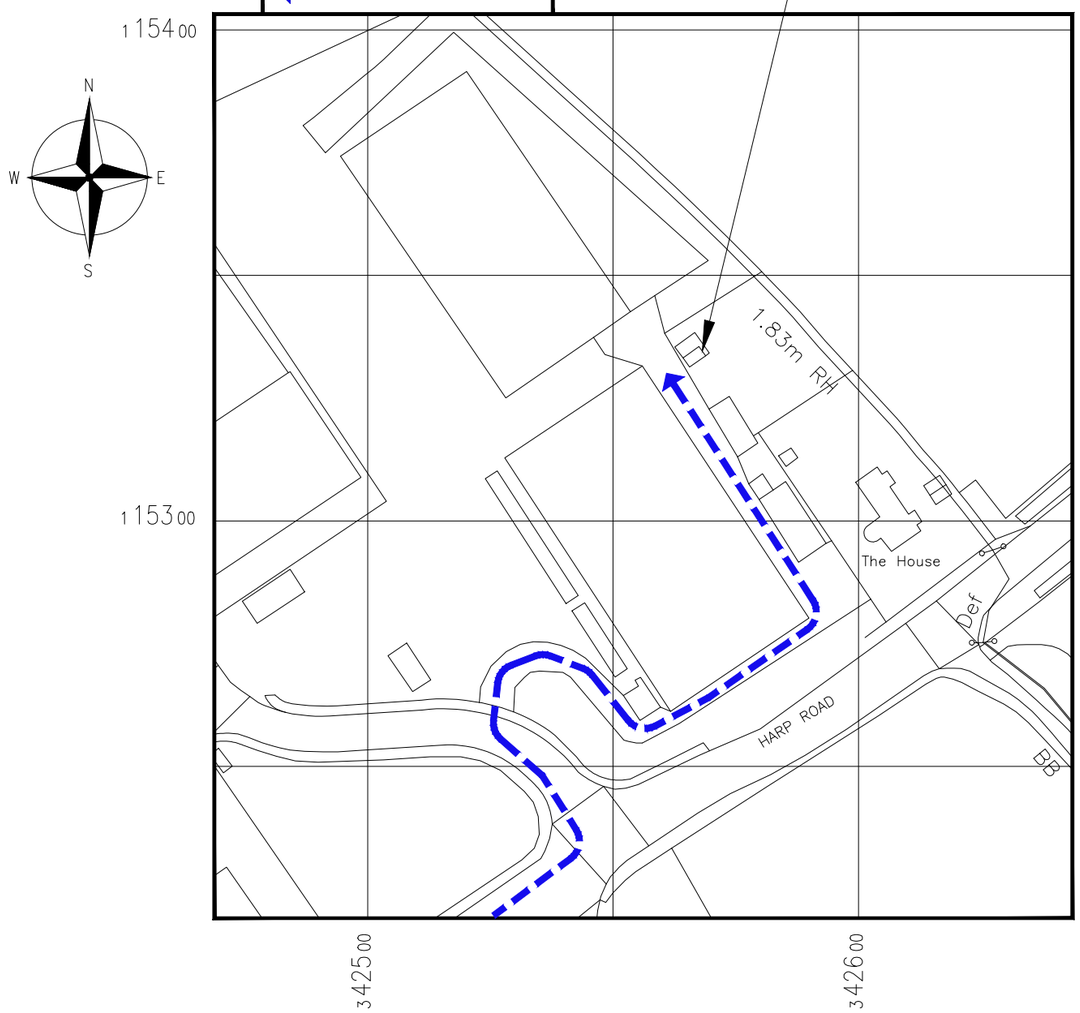

DETAILED SITE LOCATION
(Scale 1:1250)

Based upon Ordnance Survey map extract
with the permission of the Controller of
Her Majesty's Stationery Office.
Crown copyright.
Licence No. 100020449

50 0 50 100 150

ORIGINAL SCALE AT A3 – 1:1250

ALL DIMENSIONS IN METRES

ALL DIMENSIONS ARE IN mm UNLESS NOTED OTHERWISE

N.G.R	E: 342568 N: 115334
CONCESSION REQUIRED	NO

DIRECTIONS TO SITE:
ON THE M5 TAKE EXIT FOR A358 TAUNTON, FOLLOW THE A538 AND TAKE THE EXIT AT THE ROUNDABOUT ONTO A303/HARP ROAD. TAKE THE LEFT ONTO HIGGINS GRAVE LANE AND THE SITE IS AT THE FAR END OF THE NURSERY.

REV	MODIFICATION	BY	CH	DATE
B	Text Amendments	DvB	PJOB	13.05.15
A	Issued for Approval	KJI	PJOB	30.01.15

HUAWEI

vodafone
CTIL - BEACON

Cell Name	Opt.
LOPEN HEAD NURSERY	–

Cell ID No

CTIL	TEF	VF
126549	019877	5841

Site Address / Contact Details

LOPEN
WATERGATE ON A303
TA13 5JH

Drawing Title:
SITE LOCATION MAPS

Purpose of issue:
PLANNING

Drawing Number:
100

Surveyed By:		Original Sheet Size:		Issue:
GC		A3		B
Drawn: KJI	Date: 30.01.15	Checked: PJOB	Date: 30.01.15	

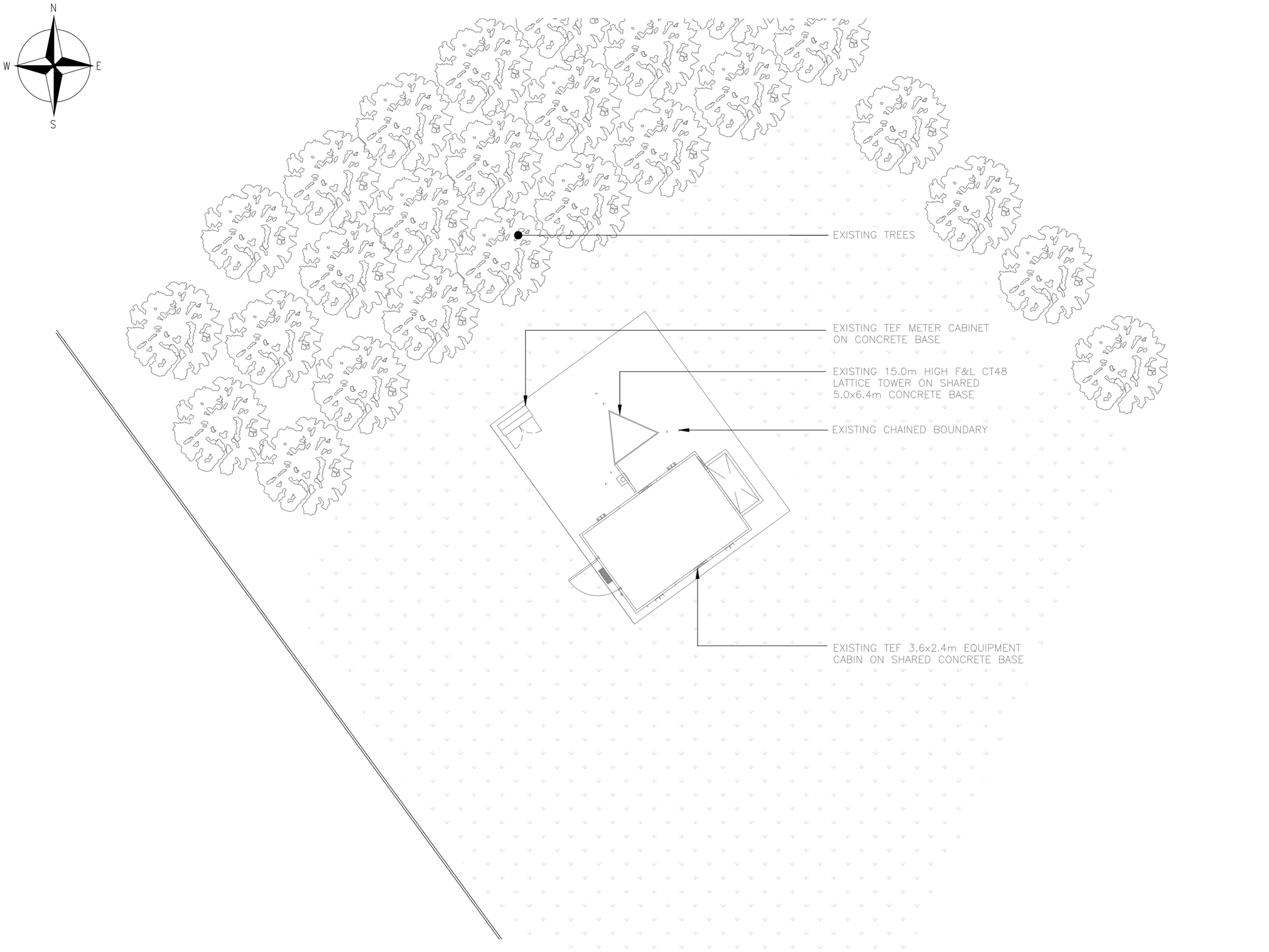

EXISTING SITE PLAN
(1:100)

5000 0 5000 10000

ORIGINAL SCALE AT A3 – 1:100

ALL DIMENSIONS IN MILLIMETRES

ALL DIMENSIONS ARE IN mm UNLESS NOTED OTHERWISE

N.G.R	E: 342568 N: 115334
CONCESSION REQUIRED	NO

NOTES:

REV	MODIFICATION	BY	CH	DATE
C	Drawing Subject Amended	DvB	PJOB	13.05.15
B	Tower Updated	DC	CM	30.04.15
A	Issued for Approval	DvB	PJOB	13.05.15

HUAWEI

vodafone
CTIL - BEACON

Cell Name	Opt.
LOPEN HEAD NURSERY	–

Cell ID No

CTIL	TEF	VF
126549	019877	5841

Site Address / Contact Details

LOPEN
WATERGATE ON A303
TA13 5JH

Drawing Title:
EXISTING SITE PLAN

Purpose of issue:
PLANNING

Drawing Number:
200

Surveyed By:		Original Sheet Size:		Issue:
CM		A3		C
Drawn: KJI	Date: 30.01.15	Checked: PJOB	Date: 30.01.15	

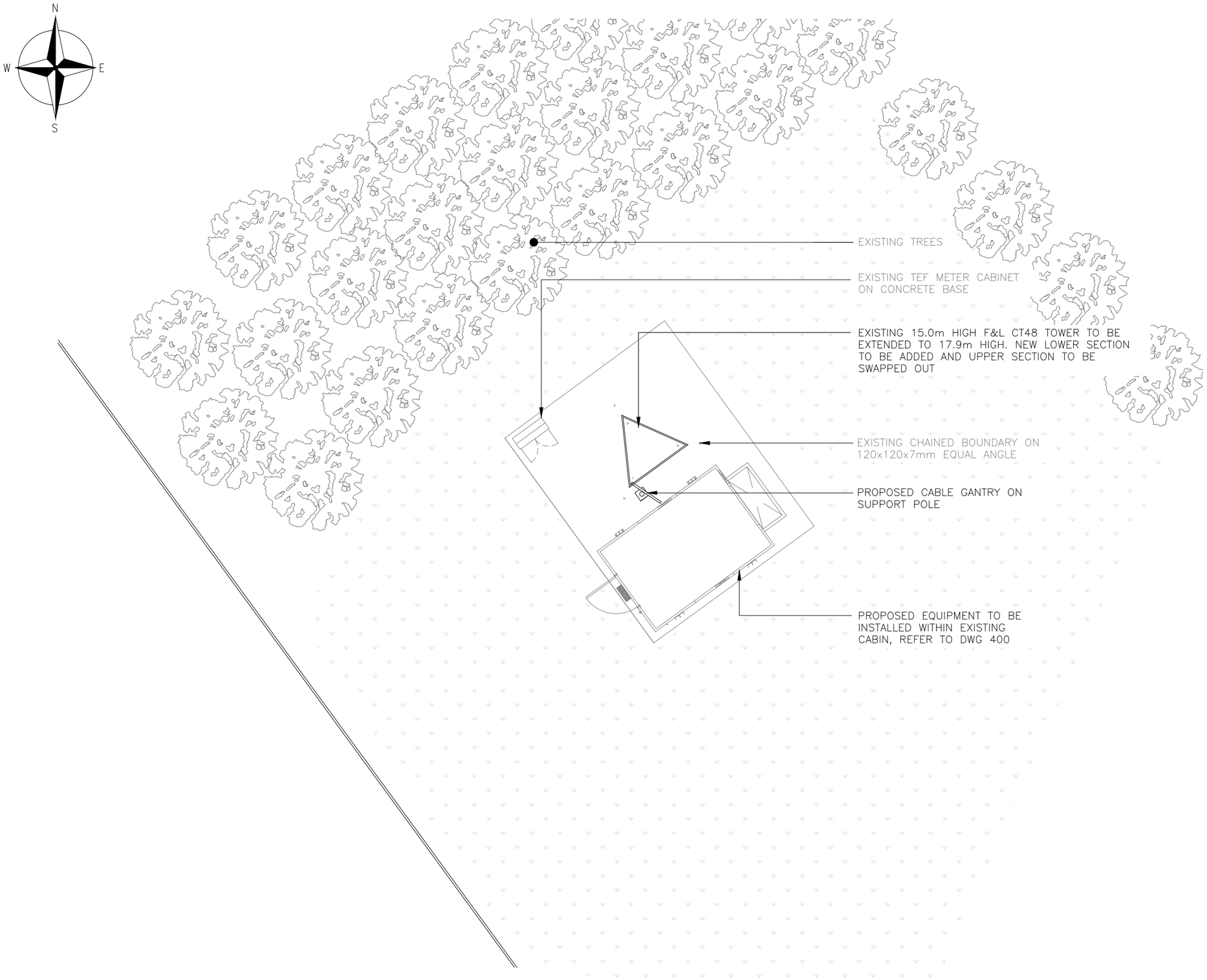

PROPOSED SITE PLAN

(1:100)

5000 0 5000 10000

ORIGINAL SCALE AT A3 – 1:100

ALL DIMENSIONS IN MILLIMETRES

ALL DIMENSIONS ARE IN mm UNLESS NOTED OTHERWISE

N.G.R	E: 342568 N: 115334
CONCESSION REQUIRED	NO

NOTES:

REV	MODIFICATION	BY	CH	DATE
A	Issued for Approval	DvB	PJOB	13.05.15

HUAWEI

vodafone

CTIL - BEACON

Cell Name	Opt.
LOPEN HEAD NURSERY	–

Cell ID No

CTIL	TEF	VF
126549	019877	5841

Site Address / Contact Details

LOPEN
WATERGATE ON A303
TA13 5JH

Drawing Title: PROPOSED SITE PLAN

Purpose of issue: PLANNING

Drawing Number: 201

Surveyed By:		Original Sheet Size:		Issue:
CM		A3		A
Drawn: KJI	Date: 30.01.15	Checked: PJOB	Date: 30.01.15	

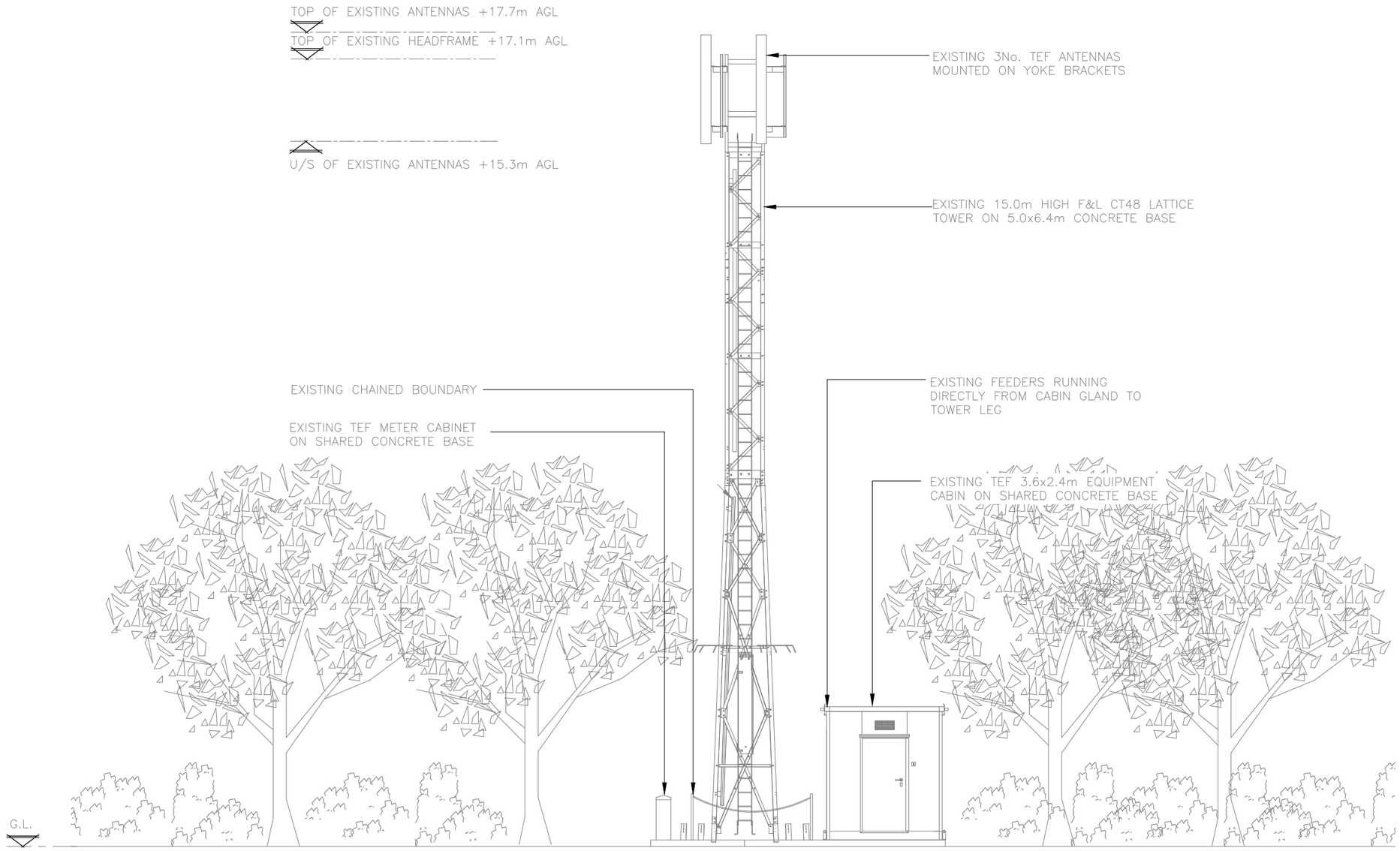

EXISTING SOUTH WEST ELEVATION

(1:100)

5000 0 5000 10000

ORIGINAL SCALE AT A3 – 1:100

ALL DIMENSIONS IN MILLIMETRES

ALL DIMENSIONS ARE IN mm UNLESS NOTED OTHERWISE

N.G.R	E: 342568 N: 115334
CONCESSION REQUIRED	NO

NOTES:
ANTENNA HEIGHTS ADJUSTED FROM THOSE SHOWN ON IBD

REV	MODIFICATION	BY	CH	DATE
C	Text Amendment	DvB	PJOB	13.05.15
B	Tower Updated	DC	CM	30.04.15
A	Issued for Approval	KJI	PJOB	30.01.15

HUAWEI

vodafone

CTIL - BEACON

Cell Name	Opt.
LOPEN HEAD NURSERY	–

Cell ID No

CTIL	TEF	VF
126549	019877	5841

Site Address / Contact Details

LOPEN
WATERGATE ON A303
TA13 5JH

Drawing Title:
EXISTING SITE ELEVATION

Purpose of issue:
PLANNING

Drawing Number:
300

Surveyed By:		Original Sheet Size:		Issue:
CM		A3		C
Drawn: KJI	Date: 30.01.15	Checked: PJOB	Date: 30.01.15	

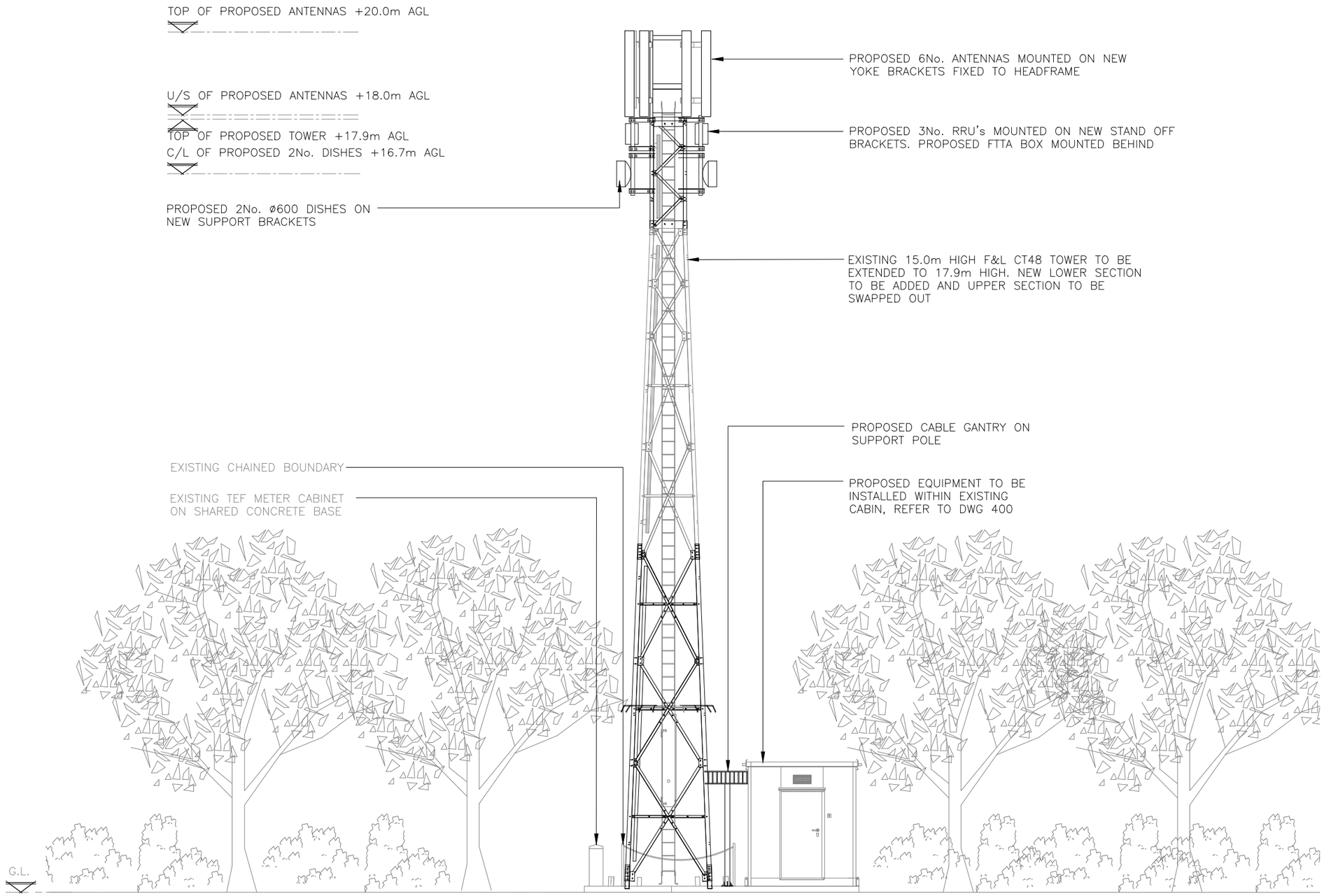

PROPOSED SOUTH WEST ELEVATION

(1:100)

5000 0 5000 10000

ORIGINAL SCALE AT A3 – 1:100

ALL DIMENSIONS IN MILLIMETRES

The drawings comply with CTIL Beacon Standard ICNIRP guidelines.

Designed in accordance with CTIL Beacon documents: SDN0008 & SDN0009 'ICNIRP Compliance Summary'

ALL DIMENSIONS ARE IN mm UNLESS NOTED OTHERWISE

N.G.R	E: 342568 N: 115334
CONCESSION REQUIRED	NO

NOTE:
GDC REQUIRED FOR SUITABILITY OF EXISTING TOWER FOR UPGRADE WORKS

REV	MODIFICATION	BY	CH	DATE
D	Tower details revised	DvB	PJOB	13.05.15
C	Dishes and Tower Updated	DC	CM	30.04.15
B	RRU'S relocated closer to antenna	CM	PJOB	11.02.15
A	Issued for Approval	KJI	PJOB	30.01.15

HUAWEI

vodafone

CTIL - BEACON

Cell Name	Opt.
LOPEN HEAD NURSERY	–

Cell ID No

CTIL	TEF	VF
126549	019877	5841

Site Address / Contact Details

LOPEN
WATERGATE ON A303
TA13 5JH

Drawing Title:
PROPOSED SITE ELEVATION

Purpose of issue:
PLANNING

Drawing Number:
301

Surveyed By:		Original Sheet Size:		Issue:
CM		A3		D
Drawn: KJI	Date: 30.01.15	Checked: PJOB	Date: 30.01.15	

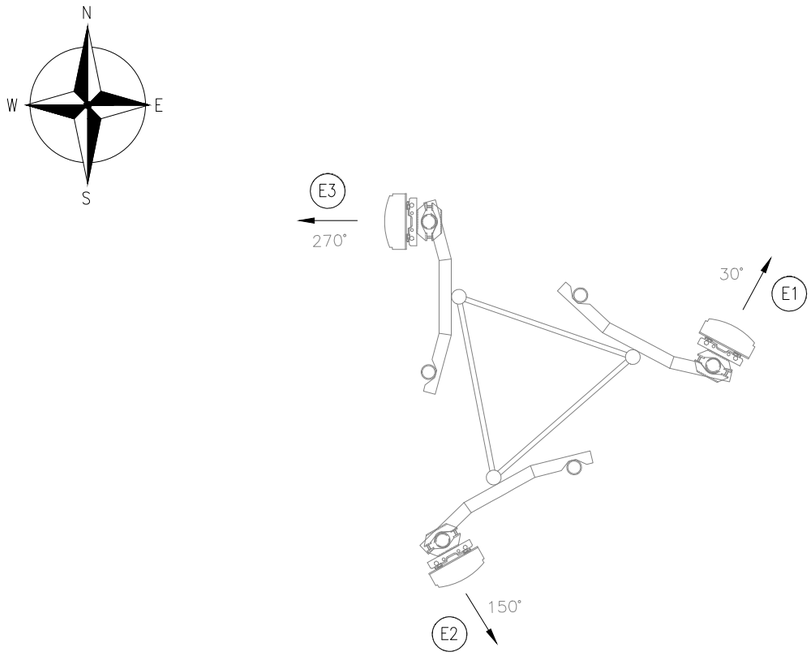

EXISTING ANTENNA PLAN
(1:25)

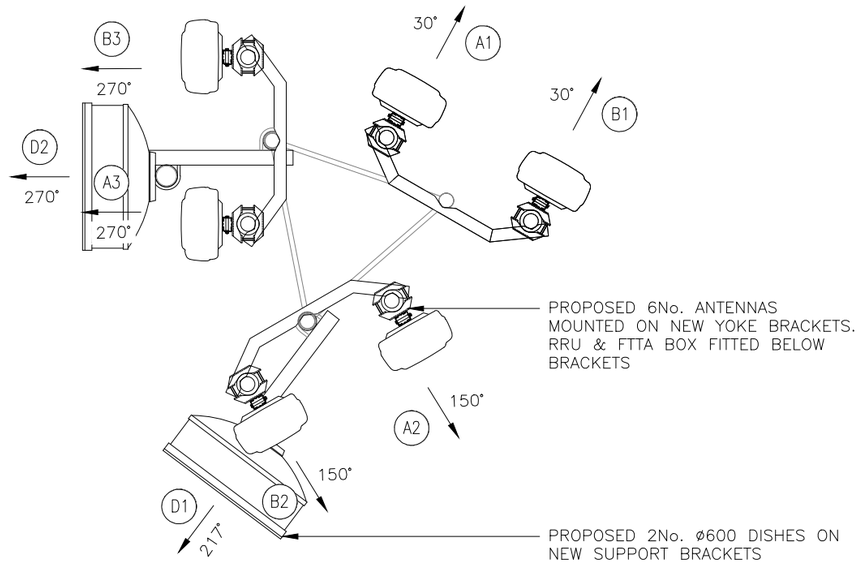

PROPOSED ANTENNA PLAN
(1:25)

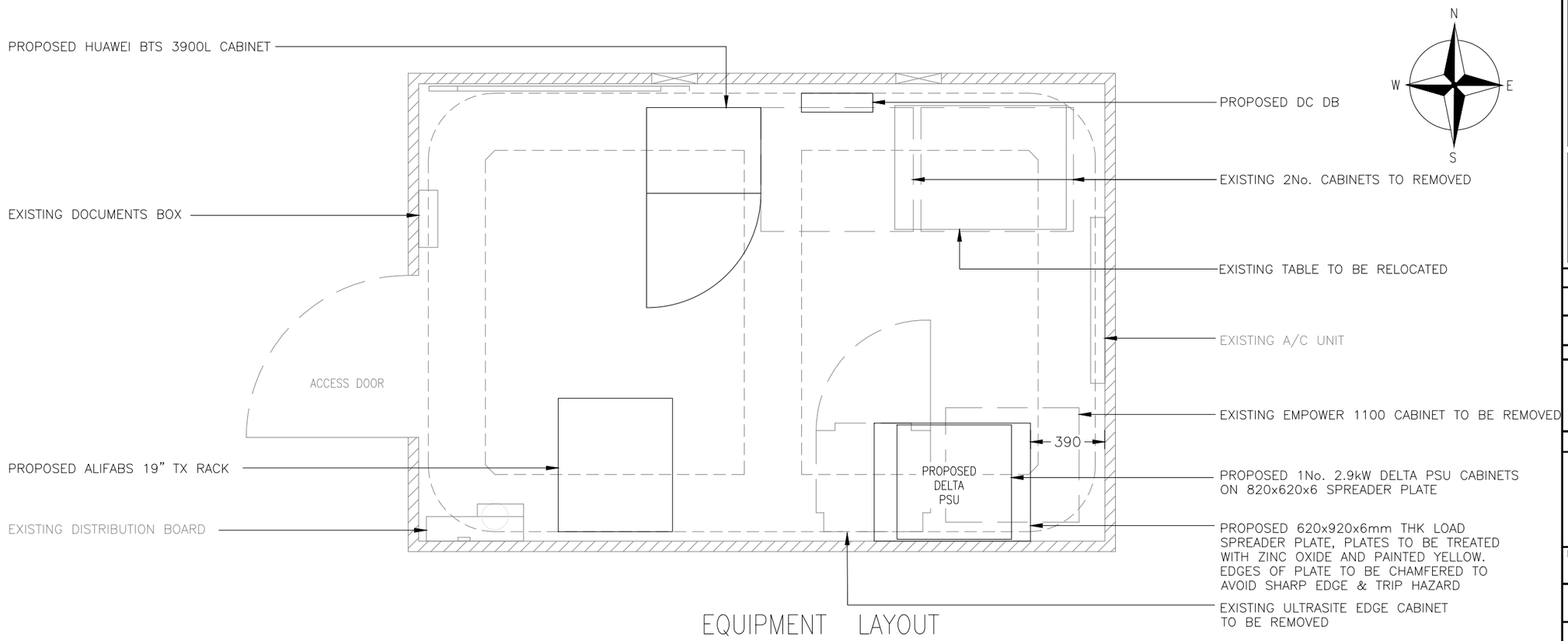

EQUIPMENT LAYOUT
(1:25)

The drawings comply with CTIL Beacon Standard ICNIRP guidelines.
Designed in accordance with CTIL Beacon documents: SDN0008 & SDN0009 'ICNIRP Compliance Summary'

ALL DIMENSIONS ARE IN mm UNLESS NOTED OTHERWISE

N.G.R	E: 342568 N: 115334
CONCESSION REQUIRED	NO

NOTES:
IBD CALLS OFF PROPOSED 6U WALL MOUNT FOR PROPOSED COMMS. DRAWING REVISED TO SHOW 19" TX RACK AS PER LATEST GUIDES FOR TX SOLUTION

GDC REQUIRED FOR SUITABILITY OF EXISTING TOWER FOR UPGRADE WORKS

REV	MODIFICATION	BY	CH	DATE
D	Tower details revised	DvB	PJOB	13.05.15
C	Dishes Added To Plan	DC	CM	30.04.15
B	TX Rack added	CM	PJOB	11.02.15
A	Issued for Approval	KJI	PJOB	30.01.15

HUAWEI

vodafone
CTIL - BEACON

Cell Name	Opt.
LOPEN HEAD NURSERY	–

Cell ID No

CTIL	TEF	VF
126549	019877	5841

Site Address / Contact Details
LOPEN
WATERGATE ON A303
TA13 5JH

Drawing Title:
ANTENNA & EQUIPMENT LAYOUT

Purpose of issue:
PLANNING

Drawing Number:
400

Surveyed By:		Original Sheet Size:		Issue:
CM		A3		D
Drawn: KJI	Date: 30.01.15	Checked: PJOB	Date: 30.01.15	

CONFIGURATION: VF HUAWEI S2 LOW | VOD: UK_SRB_312_221_HP | CHOICE: P2C1

EXISTING & PROPOSED ANTENNA SCHEDULE (EXISTING EQUIPMENT SHOWN GREY)

PROPOSED & EXISTING ANTENNAS		OPERATOR	FUNCTION	CO-AX FEEDER INFORMATION: JUMPER 1 = JUMPER FROM END OF MAIN FEEDER TO ANTENNA OR FROM RRU TO ANTENNA; MAIN FEEDER = MAIN FEEDER RUN BETWEEN ANY JUMPERS; JUMPER 2 = JUMPER AT BOTTOM END OF MAIN FEEDER TO CABINET EG FROM COMBINER OR ASTP PLATE; TOTAL LENGTH OF CO-AX FEEDER RUN REGARDLESS OF DIA				CO-AX FEEDERS QTY RE-USE EXISTING IF POSSIBLE (SUBJECT TO TESTING*)			FIBRE INFORMATION (* = IF REQ'D): 12 CORE FIBRE FROM BBU TO FTTA BOX 1: 23m; 12 CORE FIBRE FROM BBU TO FTTA BOX 2*: – ; 12 CORE FIBRE FROM BBU TO FTTA BOX 3*: –			DC CABLE INFO: NOTE: DC SUPPLY REQUIRED FOR RRU & AAS SOLUTIONS. CABIN/ROOM: HUAWEI DC BOX TO BE POSITIONED NEXT TO GLAND. O/D CABINET: NO DC BOX REQ'D. CABLE SIZE SPEC FROM INTERNAL DC BOX OR O/D CABINET TO RRU/AAS: 0m–70m=4mm², 71m–100m=6mm². NOTE: 1 DC CABLE REQ'D PER RRU/AAS	RRU/BIAS T/COMBINER/MHA/TMA: RECORD QTY'S OF EXISTING AND PROPOSED COMPONENTS						ANTENNAS: RECORD ANTENNA DETAILS								
				FEEDER JUMPER 1 DIA & LENGTH	MAIN FEEDER DIA & LENGTH	FEEDER JUMPER 2 DIA & LENGTH	TOTAL LENGTH	EX'TNG	PROPOSED	NEW OR RE-USE EXISTING*	FTTA BOX 1 TO AAS/RRU DUAL CORE	FTTA BOX 2* TO AAS/RRU DUAL CORE	FTTA BOX 3* TO AAS/RRU DUAL CORE	HUAWEI DC BOX OR O/D CABINET TO AAS/RRU CABLE TYPE & LENGTH	RRU QTY	BIAS T (SBT) QTY	COMBINERS (HIGH LEVEL INCLUDE STREETPOLES)	COMBINERS (LOW LEVEL IN CABINET, CABIN ETC)	MHA (TEF) EXT'G QTY	TMA (VF) EXT'G QTY	ANTENNA & PORT REF	ANTENNA MANUFACTURERS PART No.	BRG°	HEIGHT TO TOP (m)	HEIGHT TO U/S (m)	HEIGHT TO C/L (m)	LOCATION (POLE MOUNTED, HEADFRAME, WITHIN SHROUD ETC)	STATUS	COMMENTS
SECTOR 1	EX. ANT.	TEF	1G09	–	7/8=20m	–	20m	2	–	–					–	–	–	–	–	1	E1	85X4GF	30°	17.7m	15.3m	16.5m	YOKE BRACKET	REMOVE	–
		–	–	–	–	–	–	–	–	–					–	–	–	–	–	–	–	–	–	–	–	–	–	–	–
SECTOR 1	PROP. ANT A1	VF/TEF	1GU09	1/2=2m	–	–	2m	–	–	–	2m	–	–	4mm²=23m	1	–	–	–	–	–	A1a	HUAWEI ADU451604 (501633)	30°	20.0m	18.0m	19.0m	YOKE BRACKET	NEW	–
		SPARE	–	–	–	–	–	–	–	–	–	–	–	–	–	–				–	A1b								
SECTOR 1	PROP. ANT B1	VF/TEF	1L08	1/2=1m	7/8=18m	1/2=4m	23m	–	2	NEW	–	–	–	–	–	1	–	–	–	–	B1a	HUAWEI ADU451604 (501633)	30°	20.0m	18.0m	19.0m	YOKE BRACKET	NEW	–
		SPARE	–	–	–	–	–	–	–	–	–	–	–	–	–	–	–	–	–	–	B1b								
SECTOR 2	EX. ANT.	TEF	2G09	–	7/8=20m	–	20m	2	–	–					–	–	–	–	–	1	E2	85X4GF	150°	17.7m	15.3m	16.5m	YOKE BRACKET	REMOVE	–
		–	–	–	–	–	–	–	–	–					–	–	–	–	–	–	–	–	–	–	–	–	–	–	–
SECTOR 2	PROP. ANT A2	VF/TEF	2U09	1/2=2m	–	–	2m	–	–	–	2m	–	–	4mm²=23m	1	–	–	–	–	–	A2a	HUAWEI ADU451604 (501633)	150°	20.0m	18.0m	19.0m	YOKE BRACKET	NEW	–
		SPARE	–	–	–	–	–	–	–	–	–	–	–	–	–	–				–	A2b								
SECTOR 2	PROP. ANT B2	VF/TEF	2L08	1/2=1m	7/8=18m	1/2=4m	23m	–	2	NEW	–	–	–	–	–	1	–	–	–	–	B2a	HUAWEI ADU451604 (501633)	150°	20.0m	18.0m	19.0m	YOKE BRACKET	NEW	–
		SPARE	–	–	–	–	–	–	–	–	–	–	–	–	–	–	–	–	–	–	B2b								
SECTOR 3	EX. ANT.	TEF	3G09	–	7/8=20m	–	20m	2	–	–					–	–	–	–	–	1	E3	85X4GF	270°	17.7m	15.3m	16.5m	YOKE BRACKET	REMOVE	–
		–	–	–	–	–	–	–	–	–					–	–	–	–	–	–	–	–	–	–	–	–	–	–	–
SECTOR 3	PROP. ANT A3	VF/TEF	3GU09	1/2=2m	–	–	2m	–	–	–	2m	–	–	4mm²=23m	1	–	–	–	–	–	A3a	HUAWEI ADU451604 (501633)	270°	20.0m	18.0m	19.0m	YOKE BRACKET	NEW	–
		SPARE	–	–	–	–	–	–	–	–	–	–	–	–	–	–				–	A3b								
SECTOR 3	PROP. ANT B3	VF/TEF	3L08	1/2=1m	7/8=18m	1/2=4m	23m	–	2	NEW	–	–	–	–	–	1	–	–	–	–	B3a	HUAWEI ADU451604 (501633)	270°	20.0m	18.0m	19.0m	YOKE BRACKET	NEW	–
		SPARE	–	–	–	–	–	–	–	–	–	–	–	–	–	–	–	–	–	–	B3b								

PROPOSED DISH KEY

STATUS	OPERATOR	DISH REF	DISH DIA	BRG	C/LINE (AGL)	LINK No.	COMMENTS
PROPOSED	VF	D1	600ø	217°	16.7m	–	–
PROPOSED	VF	D2	600ø	270°	16.7m	–	–

ANTENNA REFERENCE KEY

A=	ANTENNA GROUP (A–Z)
1=	CELL No. (1, 2, 3)
b=	UNIQUE BAND REFERENCE
DISH	Dish (1–13)

FUNCTION KEY

1=	SECTOR (2,3 etc)
U=	UMTS (G=GSM) (L=LTE)
21=	2100 BAND (09=0900,18=1800)

STATUS KEY

NEW =	NEW ONTO SITE
EXISTING =	ON SITE AND NOT BEING MOVED
RE–USE =	ON SITE BUT BEING MOVED
REMOVE =	REMOVED FROM SITE

OPERATOR KEY

VF =	VODAFONE
TEF =	TELEFONICA

STREETPOLE FEEDER LENGTH & DIAMETER GUIDANCE NOTES

TOTAL DISTANCE MEASURED FROM ANTENNA (OR COMBINER) TO BTS CABINET.
NOTE: THE TOTAL IS TO INCLUDE THE MAIN FEEDER PRE–RIGGED IN THE POLE. IF FEEDER DIAMETER VARIES THE LENGTHS ARE TO BE ITEMISED SEQUENTIALLY IN THE COLUMNS FROM THE ANTENNA (OR COMBINER) TO THE BTS AS FOLLOWS: MAIN FEEDER, MAIN FEEDER JUMPER 1, MAIN FEEDER JUMPER 2. TOTAL LENGTH. REFER TO POLE MANUFACTURER'S DOCUMENTATION FOR FEEDER SIZES WITHIN THE POLE.

ALL DIMENSIONS ARE IN mm UNLESS NOTED OTHERWISE

N.G.R E: 342568 N: 115334

CONCESSION REQUIRED NO

NOTES:

REV	MODIFICATION	BY	CH	DATE
C	Tower details revised	DvB	PJOB	13.05.15
B	Dishes Updated	DC	CM	30.04.15
A	Issued for Approval	KJI	PJOB	30.01.15

HUAWEI

vodafone

CTIL - BEACON

Cell Name	Opt.
LOPEN HEAD NURSERY	–

Cell ID No

CTIL	TEF	VF
126549	019877	5841

Site Address / Contact Details

LOPEN
WATERGATE ON A303
TA13 5JH

Drawing Title: ANTENNA SCHEDULE

Purpose of issue: PLANNING

Drawing Number: 500

Surveyed By: CM | Original Sheet Size: A3 | Issue: C

Drawn: KJI Date: 30.01.15 | Checked: PJOB Date: 30.01.15i

H- Low Capacity RRU Low Band only. VOD S_UK_SRB_312_221_HP

S2 Low Huawei

- RRU at 900 only.
- L800 uses existing feeders.
- On the 1 antenna position, a 4 port 800/900 & UWB antenna cab be used in phase 1 if restricted by structural limitations
- RET Controlled via U9VF & L8 (2 antenna) & U9 (1 antenna).

P2C1

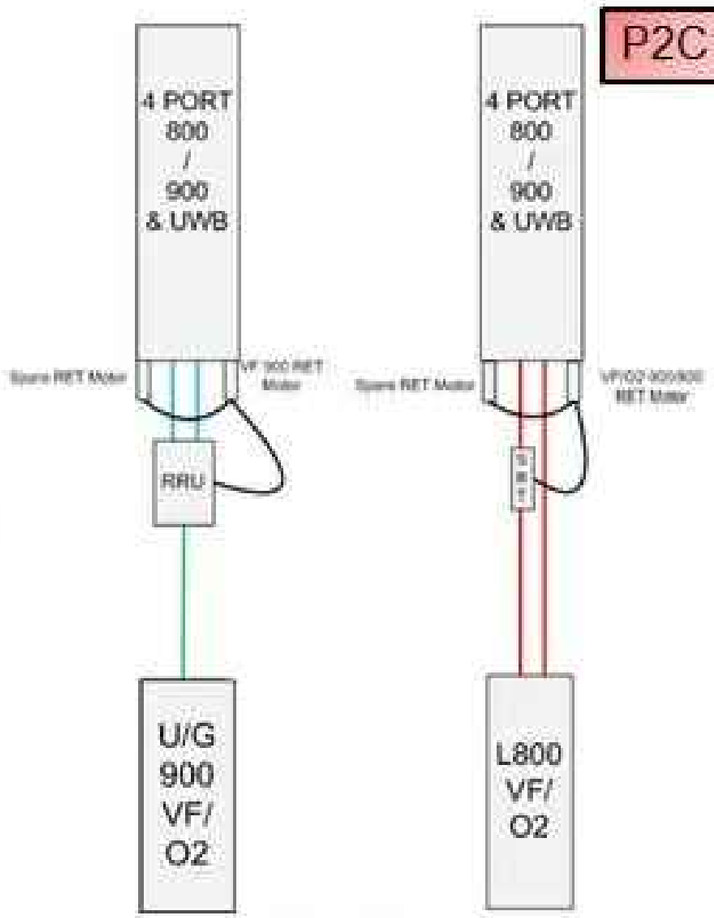

2 antenna positions

RF SYSTEMS SCHEMATIC

NTS

ALL DIMENSIONS ARE IN mm UNLESS NOTED OTHERWISE

N.G.R	E: 342568 N: 115334
CONCESSION REQUIRED	NO

REV	MODIFICATION	BY	CH	DATE
A	Issued for Approval	KJI	PJOB	30.01.15

HUAWEI

vodafone

CTIL - BEACON

Cell Name	Opt.
LOPEN HEAD NURSERY	–

Cell ID No

CTIL	TEF	VF
126549	019877	5841

Site Address / Contact Details

LOPEN
WATERGATE ON A303
TA13 5JH

Drawing Title: RF SYSTEMS SCHEMATIC

Purpose of issue: PLANNING

Drawing Number: 501

Surveyed By:		Original Sheet Size:		Issue:
CM		A3		A
Drawn: KJI	Date: 30.01.15	Checked: PJOB	Date: 30.01.15i	

SUPPORT STRUCTURE KEY

EXISTING/ PROPOSED	HEIGHT	MANUFACTURER	TYPE	COLOUR (INCLUDE RAL CODE IF NON STANDARD) & FINISH (TIMBER ETC)	STATUS	STREETWORKS HATCH HEIGHT ABOVE G/L	STREETWORKS HATCH BEARING	STREETWORKS* USE EXISTING ROOT?	STREETWORKS* IF EXISTING ROOT IS TOO DEEP SPECIFY SOLUTION REQ'D	COMMENTS
EXISTING	15.0m	FRANCIS & LEWIS	CT48 15/6	GALVANISED	UPGRADE	–	–	–	–	SECTION A TO BE REMOVED
PROPOSED	17.9m	FRANCIS & LEWIS	MODULES C75 & A25	GALVANISED	NEW	–	–	–	–	FITTED TO EXISTING TOWER
PROPOSED	2.5m	–	Ø88.9 SUPPORT POLES	GALVANISED	NEW	–	–	–	–	6No REQUIRED
PROPOSED	–	–	YOKE BRACKET	GALVANISED	NEW	–	–	–	–	3No REQUIRED
PROPOSED	–	–	RRU BRACKET	GALVANISED	NEW	–	–	–	–	2No REQUIRED
PROPOSED	–	–	DISH BRACKET	GALVANISED	NEW	–	–	–	–	2No REQUIRED

EQUIPMENT KEY. LIST RADIO CABINETS, RRU'S, TX RACKS, COMBINER CABINET, HUAWEI FTTA BOX, HUAWEI DC DISTRIBUTION BOX

EXISTING/ PROPOSED	OPERATOR	MANUFACTURER	TYPE	SIZE (WxDxH)	COLOUR (INCLUDE RAL CODE IF NON STANDARD)	COMMENTS
EXISTING	TEF	ELLIOT	EQUIPMENT CABIN	3710x2510x2895	RAL 7035	REMAIN
EXISTING	TEF	NOKIA	ULTRASITE EDGE CABINET	660x570x1800	RAL 7035	REMOVE
PROPOSED	VF/TEF	HUAWEI	BTS 3900L CABINET	600x450x1800	RAL 7035	–
PROPOSED	VF/TEF	HUAWEI	RRU	600x600x1415	RAL 7035	3No. MOUNTED ON SUPPORT BRACKETS
PROPOSED	VF/TEF	HUAWEI	DC DISTRIBUTION BOARD	375x275x100	RAL 7035	–
PROPOSED	VF/TEF	ALIFABS	19" TX RACK	700x600x2200	RAL 7035	–

BASES/ROOTS KEY

EXISTING/ PROPOSED	OPERATOR	TYPE	SIZE	MAX DEPTH	EQUIPMENT	STRUCTURE	COMMENTS
EXISTING	VF/TEF	CONCRETE BASE	6400x5000	UNKNOWN	CABIN	F&L CT48 15/6	–

POWER SUPPLY/SOURCE

EXISTING/ PROPOSED	OPERATOR	MANUFACTURER	TYPE	SIZE (mm)	COLOUR (INCLUDE RAL CODE IF NON STANDARD)	STATUS	COMMENTS
EXISTING	TEF	MERLIN	METER CABINET	1000x475x100	RAL 7035	REMAIN	–
PROPSOED	VF/TEF	DELTA	DPS 2900 PSU	600x600x1800	RAL 7035	NEW	–

TRANSMISSION ENCLOSURE						COMMENTS
EXISTING/PROPOSED	ENCLOSURE	TRANSMISSION SOLUTION MICROWAVE ONLY/FIBRE ONLY (WITH PROVIDER NAME)/MICROWAVE+FIBRE (WITH PROVIDER NAME)	U SPACE AVAILABLE	CURRENT TRANSMISSION KIT LOCATION	PROPOSED TRANSMISSION KIT LOCATION	–
PROPOSED	19"" RACK	MICROWAVE + FIBRE	48U	–	X	

COOLING INFORMATION

EXISTING SYSTEM	EXISTING SYSTEM SUPPLIER	EXISTING RATING	EXISTING HEAT LOAD	PROPOSED HEAT LOAD	UPGRADE REQUIRED
DAC	AIREDALE	12.0kW	6.0kW	8.9Kw	NO

EQUIPMENT SCHEDULE

NTS

ALL DIMENSIONS ARE IN mm UNLESS NOTED OTHERWISE

N.G.R	E: 342568 N: 115334
CONCESSION REQUIRED	NO

NOTES:
REFER TO CTIL DOCUMENT SDN0001 SECTION 5.2 FOR A POPULATED EXAMPLE OF THE TABLE.

ADDITIONAL ACTIVITIES REQ'D PLEASE MARK WITH A ✓	
UTILITY SEARCHES	
GPR SCAN	
TRIAL HOLE	
GDC LEVEL 1 (DESKTOP)	
GDC LEVEL 2 (MANUFACTURER)	✓
GDC LEVEL 3 (CLIMB & CALCS)	
GEOTECHNICAL SURVEY	
DNO QUOTE	
INVESTIGATIVE WORKS	
PSU LOADING SURVEY/SOLUTION	
ASBESTOS REPORT	
ELECTRICAL LOAD TEST	
STUD HARDNESS TEST	

REV	MODIFICATION	BY	CH	DATE
C	Tower details revised	DvB	PJOB	13.05.15
B	Tower details revised	CM	PJOB	11.02.15
A	Issued for Approval	KJI	PJOB	30.01.15

HUAWEI

vodafone

CTIL - BEACON

Cell Name	Opt.
LOPEN HEAD NURSERY	–

Cell ID No

CTIL	TEF	VF
126549	019877	5841

Site Address / Contact Details

LOPEN
WATERGATE ON A303
TA13 5JH

Drawing Title: EQUIPMENT SCHEDULE

Purpose of issue: PLANNING

Drawing Number: 502

Surveyed By:		Original Sheet Size:		Issue:
CM		A3		C
Drawn: KJI	Date: 30.01.15	Checked: PJOB	Date: 30.01.15	